Rev.	Description	Date	Checked
A	new release	03.30.2011	Wen

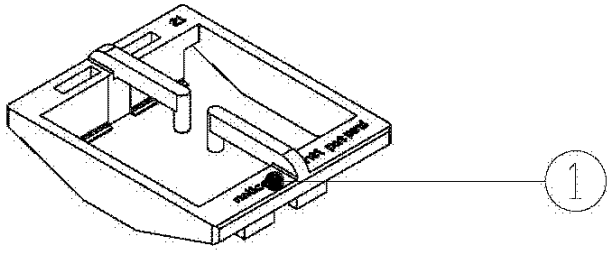

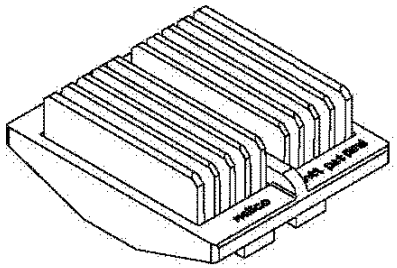

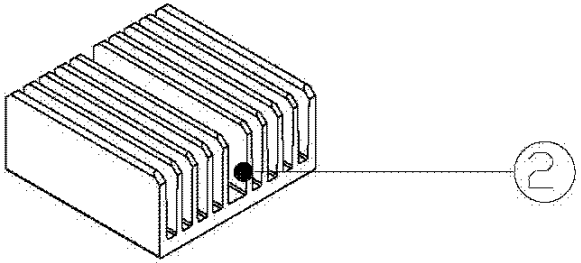

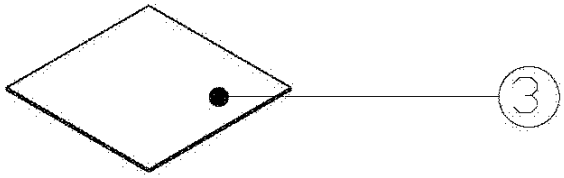

Notes:

Item	Description	Dimension (mm)	Material	Finish / Color	Qty
1	DCLIP028240800-00	28.1 x 23.7 x 7.5	plastic	blue	1
2	BHBH3121211000-07	20.8 x 20.5 x 9.5	AL 6063	black anodize	1
3	F002-00180	19 x 19 x 0.13	T725		1

Finish: see notes	Mega-Chip Electronics Pte Ltd.			
Material: see notes	Approved: Audi	Checked:	Drawn: Wen	Rev.: A
Date: 03.30.2011	Model no. : CHBA3121211002-00 (HBA21031-10BU+T725)			
Title: assembly				

REV	ALTERATION	DATE	CHECKED
A	NEWRELEASE	06.04.2008	Beckham
B			
C			
D			
E			

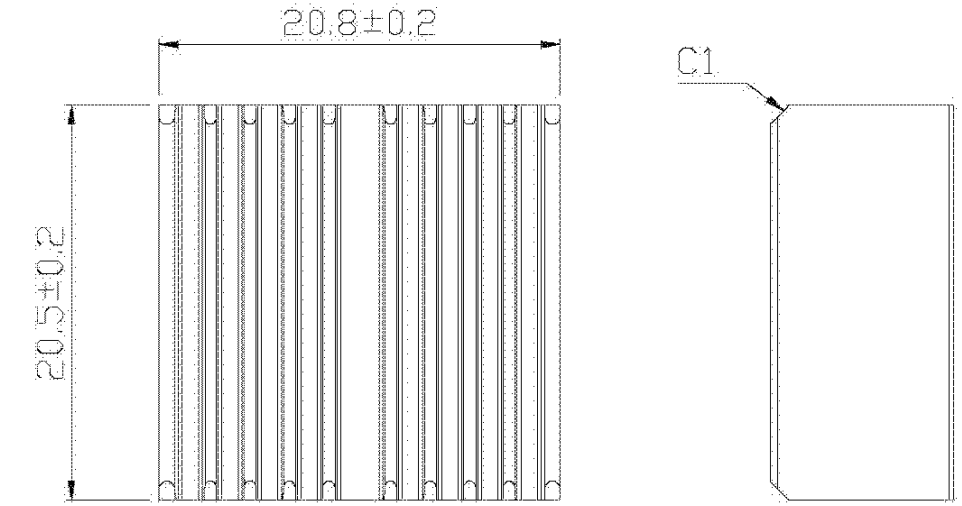

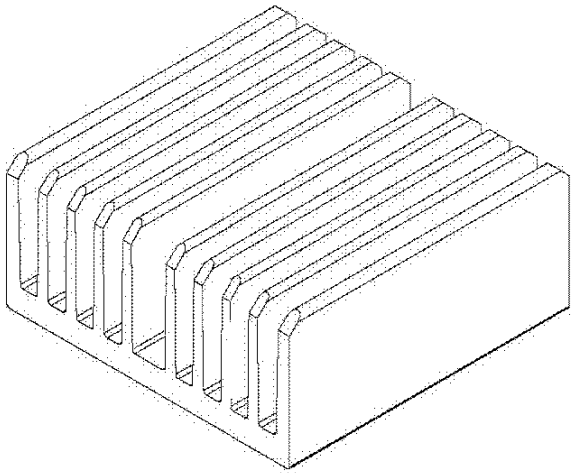

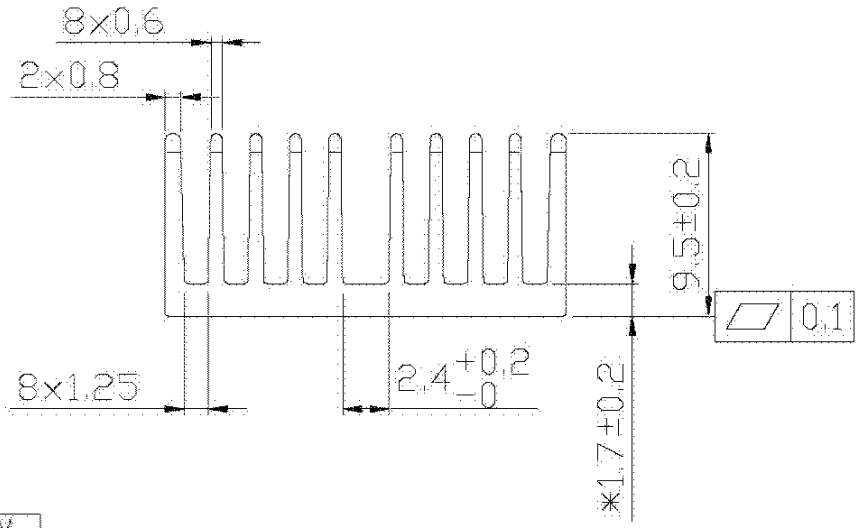

NOTES:

1."*" IS CRITICAL DIM WHICH MUST BE INSPECTION BY EACH SHIPMENT.

UNIT: MM
TOLERANCE TABLE
X. =±0.30
X.X =±0.20
X.XX =±0.10
ANGLE =± 1°

FINISH: BLACK ANODIZE	Mega-Chip Electronics Pte Ltd.			
MATERIAL: AL 6063-T5	APPROVED: Sammy	CHECKED: Wen	DRAWN: Beckham	REV: A
DATE: 06.04.2008	MODEL NO: BHBH3121211000-07 (Equal No:HBH21031-10)			
TITLE: HEAT SINK				