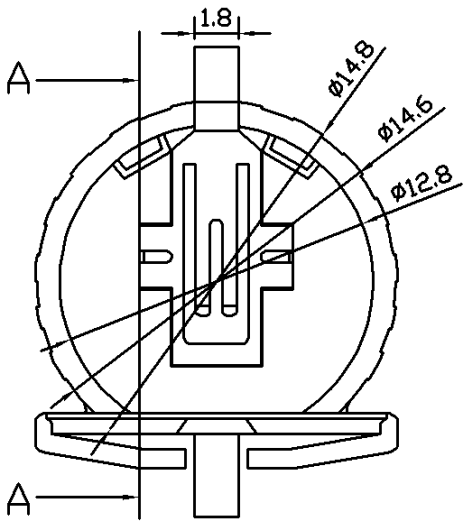

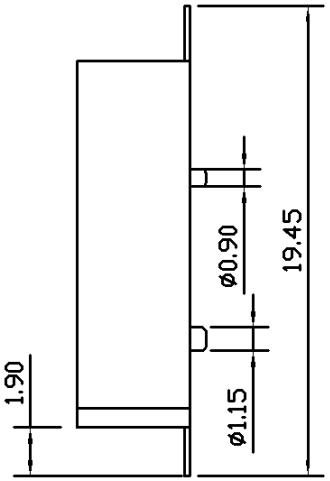

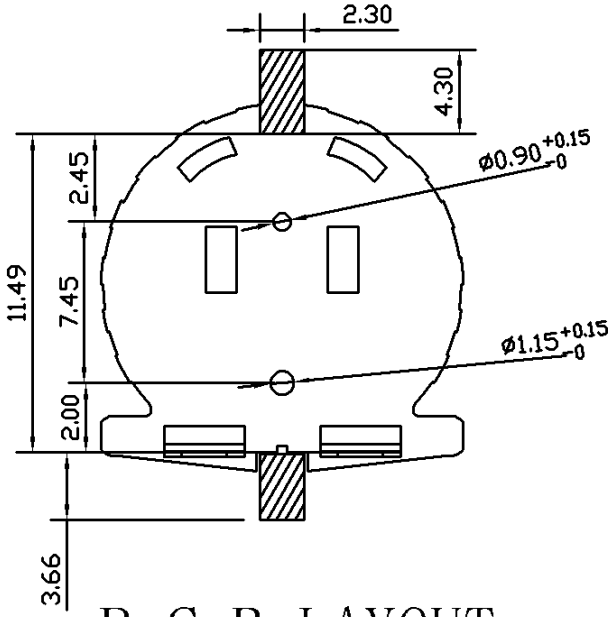

P. C. B LAYOUT

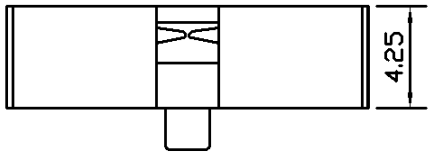

NOTES:

1. MATERIAL:
   a. HOUSING:PPS UL94 V-0
   b. CONTACT:PHOSPHOR BRONZE.
   (SURFACE PLATING: GOLD FLASH 1u"+Ni80 u")
2. ELECTRIC:
   a. CONTACT RESISTANCE: 30 MLLIOHMS MAX
   b. INSULATION RESISTANCE: 1000MEGA OHMS MIN
   c. DIELECTNIC VOLTAGE: 500V AC ONE SEC LEVEL
   d. OPERATING TEMPERATURE: -55℃-105℃
3. Applicable : Battery CR1220

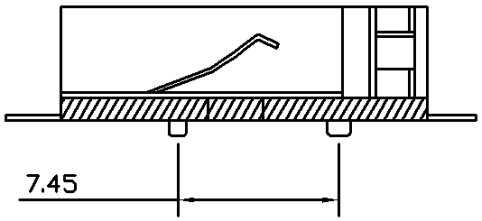

SECTION A-A

			ENGINEERING DRAWING	UNIT: mm
A1	RELEASE	12/29/'09	General Tolerances: Angle: ±° DIM: 0.0 0.25 / 0.00 0.13 / 0.000 0.05	Mega-Chip Electronics Pte Ltd.
REV	Revision Record	Date	Drawn by	Chk'd by
	Revise Only On Cad System		Appr'd by	Scale 1 : 1

Date: 12/13/007 Sheet 1 OF 1

Part No: GS291-021G REV: A1

Title: BATTERY BOX HOLDER